DESIGN AND DEVELOPMENT OF A GENERAL PURPOSE EMBEDDED ACQUISITION SYSTEM FOR TRANSPORTATON APPLICATIONS

by

AKSHAY AVINASH JOSHI

Presented to the Faculty of the Graduate School of
The University of Texas at Arlington in Partial Fulfillment
of the Requirements
for the Degree of

MASTER OF SCIENCE IN ELECTRICAL ENGINEERING

THE UNIVERSITY OF TEXAS AT ARLINGTON
August 2011

ACKNOWLEDGEMENTS

I would like to express my gratitude towards Dr. Roger Walker, who has been a constant source of encouragement and motivation for me, and also for providing invaluable advice during the past one year. I would especially like to thank him for letting me be a part of his research lab and going out of his way to supervise me in my thesis efforts. I would like to thank Dr. Jonathan Bredow and Dr. W. Alan Davis for showing interest in my research and taking the time to be a part of my thesis committee. I am also grateful towards the entire EE faculty and all my teachers, past and present.

I would also like to thank Dr. Emmanuel Fernando and Gerry Harrison of TTI for helping me perform the experiments on the test track and for providing valuable feedback.

I sincerely appreciate all the help and encouragement I received from my lab mates Jareer, Ashwin, Kenan, Digant and Sushant. Special thanks to my friends Aditya, Rakesh, Kailas, Vaibhav, Rushikesh, Apurv, Sankalp and Amey for all the fun I've had in the past two years.

Finally, I am indebted to my parents, my brother Nikhil and sister-in-law Revati for their eternal belief in me. I would not be where I am today, if not for their support and encouragement.

July 18, 2011

ABSTRACT

DESIGN AND DEVELOPMENT OF A GENERAL PURPOSE
EMBEDDED ACQUISITION SYSTEM FOR
TRANSPORTATON APPLICATIONS

Akshay Avinash Joshi, M.S.

The University of Texas at Arlington, 2011

Supervising Professor: Roger Walker, Ph.D.

The Texas Department of Transportation (TxDOT) uses many different instruments for quality assurance of new and existing pavements. These instruments measure the different characteristics of the pavement such as the longitudinal profile, transverse profile, texture, rut formation, etc to determine the smoothness and ride quality of the pavement. These instruments mainly consist of different sensors such as a laser, an accelerometer and/or a gyroscope to calculate the ride quality. Different ride statistics like the International Roughness Index (IRI), Mean Profile Depth (MPD), Present Serviceability Index (PSI) are then calculated and used to determine the need for repair of the pavements. Currently all these instruments have to be used individually to measure the ride statistics.

The objective of this thesis is to evaluate the performance of a new type of line laser for calculating the road profile and to design and develop a platform for the simultaneous operation of all the different type of profiling instruments. The research analyzed the different approaches for implementing the tire-bridging algorithm for

the line laser and evaluated the performance of each approach for calculating the longitudinal road profiles. A profiling system with the wide line laser was successfully developed and certified for use on actual roads. A dual laser profiling system, which can collect data from two profiling systems simultaneously, was also successfully developed and certified. Finally, this thesis proposed a profiling platform that can be used in conjunction with the video capture control system for the 3D Bridge Monitoring System.

TABLE OF CONTENTS

ACKNOWLEDGEMENTS ii
ABSTRACT iii
LIST OF FIGURES vii
LIST OF TABLES ix

Chapter Page

1. INTRODUCTION 1
   1.1 Motivation 2
   1.2 Organization of Thesis 3
2. BACKGROUND 4
   2.1 Inertial Profiling 4
   2.2 Profiling Algorithm 5
   2.3 Ride Statistics 7
      2.3.1 IRI 7
      2.3.2 MPD 7
3. SYSTEM DESCRIPTION 9
   3.1 Hardware Description 10
      3.1.1 RoLine Laser 10
      3.1.2 Accelerometer 12
      3.1.3 A/D Converter 12
      3.1.4 Distance Encoder 13
      3.1.5 Start Sensor 13
   3.2 Circuit Boards 13

3.2.1 Portable Profiler Signal Interface Board 13
3.2.2 RoLine Power Sync Board 15
3.3 Software Description 15
3.3.1 RoLine Data Collection Program 16
3.4 Dual Laser System 21
4. DATA PROCESSING 27
4.1 Bridging Algorithm 27
4.1.1 Averaging 29
4.1.2 Least Squares line fitting 29
4.1.3 RANSAC 31
4.2 Synchronising Data 32
5. EXPERIMENTS AND RESULTS 34
5.1 RoLine Bridge Mode 34
5.2 RoLine Laser Tire-Bridging Algorithm 35
5.2.1 Lab Experiment 35
5.2.2 Free Mode Tests on TTI track 36
5.2.3 Free Mode Tests on SH6 37
5.2.4 Dual Laser System Tests on TTI track 37
6. CONCLUSIONS AND FUTURE WORK 41
6.1 Conclusions 41
6.2 Future Work 42
REFERENCES 43
BIOGRAPHICAL STATEMENT 44

LIST OF FIGURES

Figure		Page
2.1	Basic Configuration of Inertial Profilers	4
2.2	Block diagram of the profiling equation	6
2.3	Block diagram for transfer function of the profiling algorithm	6
2.4	Typical IRI values for different types of roads	8
3.1	RoLine box showing components	9
3.2	RoLine box external connectors	10
3.3	RoLine distance measurement principle	11
3.4	Synchronisation using sync pulses	12
3.5	Signal Interface Board schematic for the RoLine laser	14
3.6	Signal Interface Board PCB layout for the RoLine laser	15
3.7	Power Sync Board schematic for RoLine laser	16
3.8	Power Sync Board PCB layout for RoLine laser	17
3.9	Bridge mode data message format	18
3.10	Free mode data message format	19
3.11	Flowchart for Data Collection Programs	24
3.12	Setup for the Dual laser system	25
3.13	Flowchart for configuring ADC(s)	26
4.1	Tilt compensation for Tire-Bridging Algorithm	28
4.2	Outlier removal for Tire-Bridging Algorithm	29
4.3	Offset types for linear least squares fit	30
5.1	RoLine profiling system Bridge mode results (TTI test track)	35

5.2 Results of Tire-Bridging algorithms (Lab) 37
5.3 Results of Tire-Bridging algorithms (TTI test track) 38
5.4 Dual Laser System results (TTI test track) 40

LIST OF TABLES

Table Page

5.1 RoLine Bridge Mode Results 36

5.2 RoLine Free Mode Results for TTI test track 39

5.3 RoLine Free Mode Results for SH6 39

5.4 Summary of Profiling results of the Dual Laser System 39

CHAPTER 1

INTRODUCTION

The Materials and Pavements Division of the Texas Department of Transportation (TxDOT) has been developing and using numerous instruments for measuring the surface quality of the pavements in Texas. TxDOT's pavement monitoring systems measure various characteristics of the pavement to detect surface roughness and assess its ride quality using different systems such as Texas high-speed inertial profilers, construction profilers, Texas rut bars, Texas skid systems and texture measurement systems. These systems are used to collect information about every major road in Texas to evaluate its serviceability and also to certify newly built pavements. Thus, it is essential to develop robust and accurate pavement data acquisition systems to reliably measure the road surface characteristics.

The pavement measurement instruments are usually mounted on the front or rear bumper of a vehicle such as a van or a pick-up truck. The vehicle is then driven on the road that has to be evaluated while the instrument collects various information pertaining to the pavement. Most of the Texas profilers use multiple sensors which include, but are not limited to, lasers for measuring the displacement, accelerometers for measuring the vehicle body motion, gyroscopes for measuring the vehicle body roll and distance encoders. The operator, who sits in the passenger seat of the vehicle, runs the data collection program associated with the instrument as the vehicle passes over the section of interest. The two main characteristics of a pavement that determine the surface roughness are longitudinal profile and texture. To measure these characteristics, TxDOT uses the high-speed inertial profiler and texture measurement

system respectively. Dr. Walker and his researchers at the Transportation Instrumentation Lab (TIL) have developed two such systems for TxDOT to measure the texture and longitudinal profile of a pavement. Both these systems use a single-point laser, an accelerometer and a distance encoder as the main sensors. Each system also has a start sensor to detect the beginning and end of the section of interest.

1.1 Motivation

The existing profiling system uses a single-point laser for measuring the displacement of the vehicle from the pavement. The advances in laser technology has enabled laser manufacturers to develop new line lasers that have a wide footprint of around 4-5 inches. The manufacturers of these lasers claim that the line lasers can be used to measure various properties of the pavements with great accuracy since they provide the true tire to road contact profile. Furthermore, lasers with even wider footprints are expected to be available soon. Two or more of such line lasers can be used together to obtain the transverse as well as longitudinal profiles in a single run. Thus, the entire 3D profile could be computed using these lasers. Therefore, TxDOT initiated a project to investigate the application of these new line lasers for profile measurement. Moreover, the existing systems that measure the texture and profile have to be run individually since separate programs are used to collect the data from these two systems. Hence, multiple runs have to be made on the same section of the road to collect all the necessary information for profile and texture measurement. Therefore, a system that can be used to collect data from all the different profiling and texture measurement systems simultaneously was designed and developed. This system also serves as a platform for the 3D Bridge Monitoring system that will be used to measure the movements of a bridge over time.

1.2 Organization of Thesis

The next chapter discusses the basic inertial profiling technique, which is the basis for all contemporary road profilers, and different ride statistics. Chapter 3 includes a description of the RoLine laser based profiling system as well as the 2-laser profiling systems. Chapter 4 describes the RoLine data processing program and the different approaches evaluated for the tire-bridging algorithm. Experiments and results are shown in Chapter 5 followed by the conclusion in Chapter 6.

CHAPTER 2

BACKGROUND

2.1 Inertial Profiling

High-speed road profiling technology was first developed by General Motors Research Laboratory in the 1960s when they built an inertial profiler. Prior to inertial profilers, road profiling was done with the help of surveying tools such as the rod and level or dipstick. Both the techniques were extremely slow since obtaining a profile measure for computing the roughness requires elevation measurements at close intervals of up to a few inches. Hence, the rod and level or dipstick profilers were impractical for very large road networks.

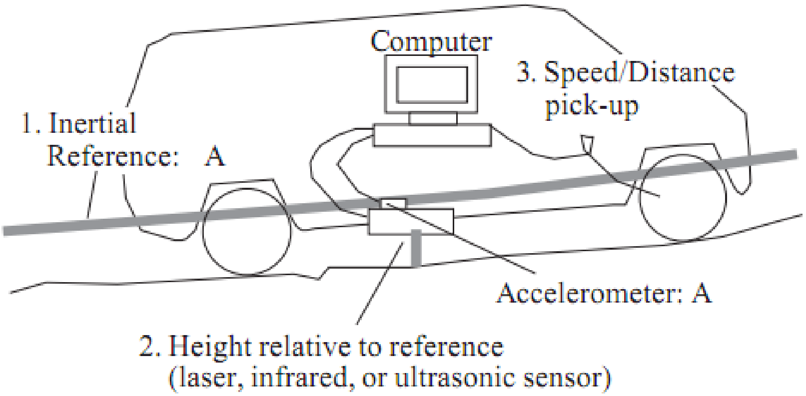

Figure 2.1. Basic Configuration of Inertial Profilers.

There are three basic components in an inertial profiler as shown in Fig. 2.1 [1]

1. An accelerometer, which provides an inertial reference and measures the vertical acceleration of the vehicle as it moves along the road. The instantaneous height of the vehicle body with respect to the reference can be computed using the acceleration.

2. A non-contacting sensor to measure the height of the ground relative to the reference i.e. the distance between the accelerometer and the ground below it. Lasers, ultrasonic and infrared transducers can be used for this purpose.

3. A distance encoder to measure the longitudinal distance traveled by the vehicle.

The biggest advantage of inertial profilers is that the data collection can be done at highway speeds. The profile computed using an inertial profiler does not look like the true profile since it filters out the long wavelengths that cause errors in the accelerometer. However, accurate and reliable profile statistics can be obtained from the inertial profilers since they minimizes human error. If the true profile is passed through a reference filter, the two profiles match up quite accurately.

2.2 Profiling Algorithm

The profilers developed at TIL mainly use an accelerometer, a laser and a distance encoder as the sensors. Once data is collected from these sensors, the road profile is reconstructed from the readings according to equation (2.1)

$$p(t) = \int [\int a(t)dt]dt - H(t) \tag{2.1}$$

where,

a(t) is the vertical acceleration,

H(t) is the height of the accelerometer from the road as measured by the laser.

Fig. 2.2 shows the block diagram for computing the road profile.

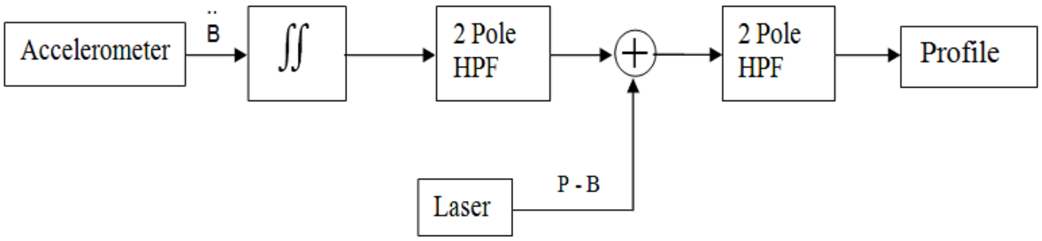

Figure 2.2. Block diagram of the profiling equation.

Integrating the accelerometer values twice gives the vertical displacement of the vehicle body. A two pole high pass filter is applied at this stage to remove the effect of long wavelengths (low frequency) on the profile. The result is added to the laser values and passed through another two pole high pass filter to obtain an accurate road profile.

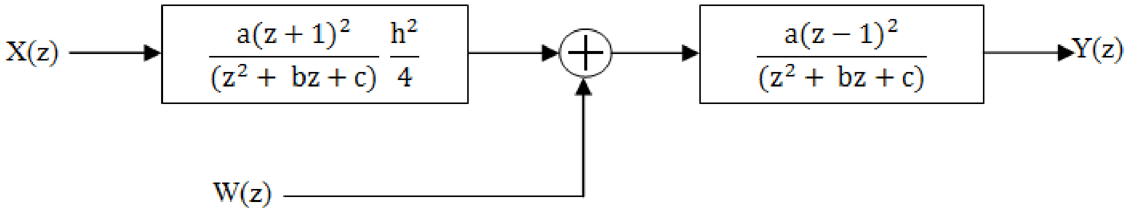

Figure 2.3. Block diagram for transfer function of the profiling algorithm.

The transfer functions of the integrator and high pass filter are shown in Fig. 2.3 [2]. The road profile can then be computed as,

$$Y(z) = X(z)\frac{h^2}{4}\frac{a(z+1)^2}{(z^2+2bz+c)} + W(z)\frac{a(z-1)^2}{(z^2+bz+c)} \tag{2.2}$$

where,

X(z) is the acceleration,

W(z) is the height given by the laser.

Finally, the profiling equation in the time domain can be written as [2]

$$y_t = -by_{t-1} - cy_{t-2} + \frac{ah^2}{4}(x_{t-2} + 2x_{t-1} + x_t) + a(w_{t-2} - 2w_{t-1} + w_t) \tag{2.3}$$

2.3 Ride Statistics

2.3.1 IRI

Once the elevation measurements are done and the profile is computed, it is essential to extract useful information from the profile. The most common way to interpret the profile information is to quantify the quality of the road as a roughness index. The International Roughness Index(IRI) is the most commonly used index worldwide for evaluating and managing road systems. The IRI is calculated using a quarter-car vehicle math model, whose response is accumulated to yield a roughness index with the units of slope (in/mi or m/km). It basically simulates the response of a reference vehicle to the road roughness by measuring the amount of vertical acceleration of the vehicle body[3]. The IRI is widely used since it is robust, repeatable, and has a high correlation with the vertical passenger acceleration. This is a good indicator of the ride quality [4].

Fig. 2.4 shows the range of IRI values for different types of roads [1].

2.3.2 MPD

Another important road surface characteristic that can be extracted from the profile is the macro-texture of the road. The macro-texture is an indicator of the

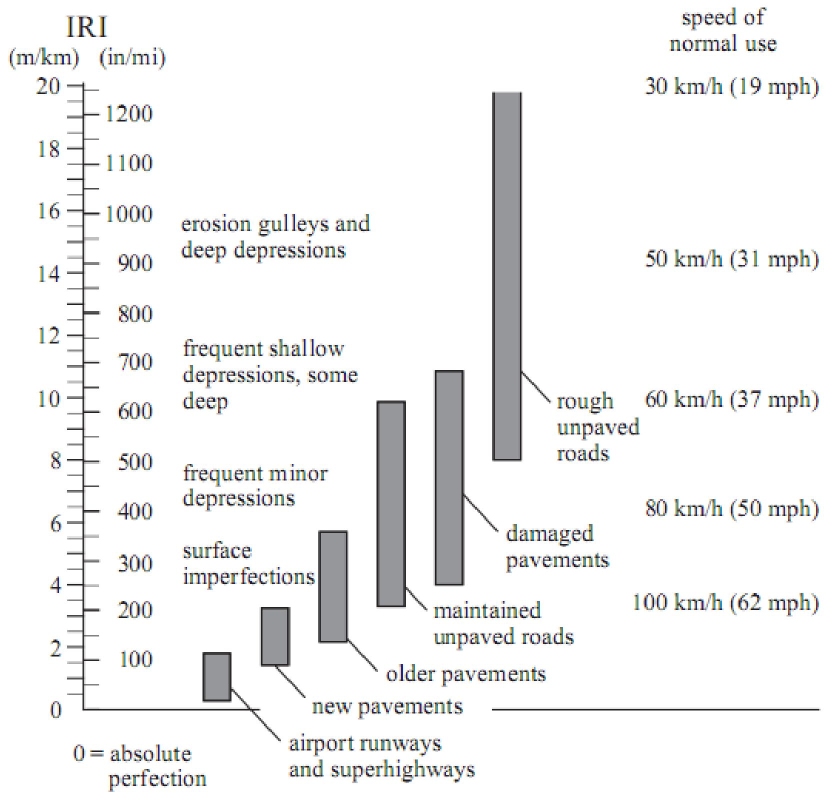

Figure 2.4. Typical IRI values for different types of roads.

interaction between the road surface and the tire footprint. It is an indicator of the amount of surface friction and tire-road noise due to acoustic pores in the pavement. The most common index used to measure the macro-texture of pavements is the Mean Profile Depth (MPD). To calculate the MPD, the measured profile is first divided into 100 mm long segments. Each segment is further divided in half and the difference between the height of the highest peak and average height of the half-segment is calculated. This difference is called the profile depth. The mean segment depth, which is the average value of the profile depth of the two halves of a segment is then calculated. The MPD is then defined as the average of all the mean segment depths of all the segments of the profile. [5]

CHAPTER 3

SYSTEM DESCRIPTION

The first part of this thesis is to test the feasibility of using the wide footprint line lasers for computing longitudinal road profiles. LMI Technologies Inc. manufactures such high speed line laser sensors. To test this laser, a box containing the RoLine laser, along with an accelerometer, an A/D converter, a signal interfacing board and a power circuit board was developed as shown in Fig. 3.1. The box provides sockets for connecting a distance encoder and an infrared start sensor as well as a power socket, a USB socket and an Ethernet socket (Fig. 3.2). The hardware components are explained in detail in the next section. Software for the RoLine profiler system and the two/three laser profiling system is explained in the subsequent sections.

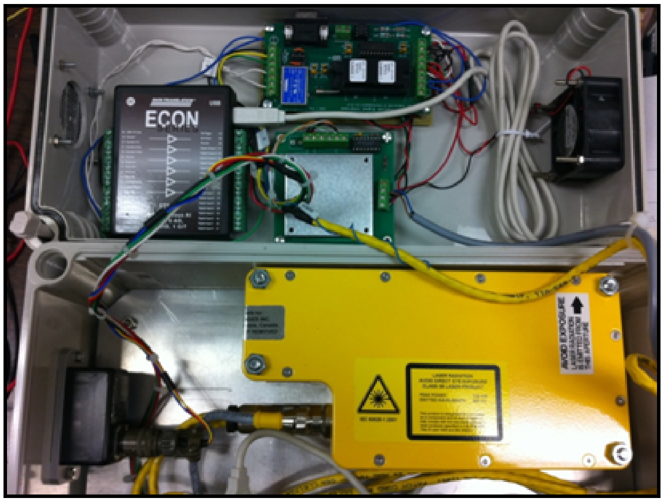

Figure 3.1. RoLine box showing components.

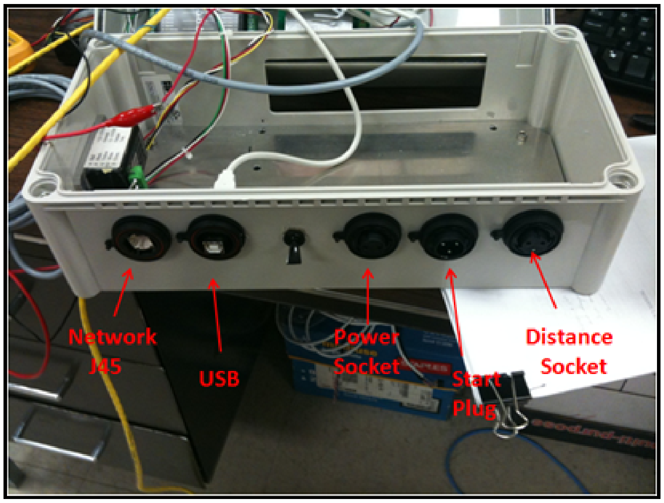

Figure 3.2. RoLine box external connectors.

3.1 Hardware Description

3.1.1 RoLine Laser

The RoLine 11xx family of lasers is a new generation of high speed, high density lasers that can be used for 3D profiling of the road. A laser line projector projects a 2.6-5.4" wide laser footprint. A digital camera mounted at an angle to the laser plane acquires images of the reflected light pattern created on the target. The distance to the target is calculated from the images taken by the digital camera based on the position of the laser line in the image. Fig. 3.3 [6] illustrates the measurement principle. The laser operates at 48VDC and has a scanning rate of 3000 Hz. The stand-off / clearance distance (CD) of this laser is 200 mm or 7.9". The measurement range (MR) of this laser is 200 mm, with a field of view (FOV) of 100 mm or 4.0" at the center of its measurement range. Unlike most other lasers, the output of the RoLine laser is in digital format. The elevation from the clearance distance is represented as a 16-bit number with a resolution of 0.01 mm. The RoLine 1130 delivers the output in the form of Ethernet packets while the RoLine 1145 has an option of delivering

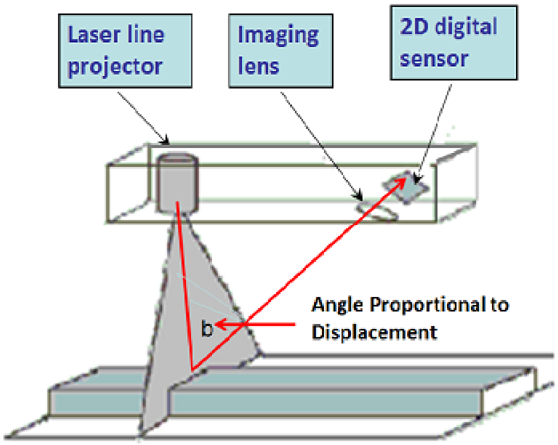

Figure 3.3. RoLine distance measurement principle.

the output in either Ethernet packets of Selcom serial format. The Ethernet output format was used on both the lasers. The RoLine 11xx lasers also output an opto-isolated 3000 Hz pulse while it is collecting data for synchronising external devices. Since it is extremely important for the profiling algorithm to get the accelerometer and laser data at the same instant, this sync pulse is used to synchronise with the accelerometer. The rising edge of the sync pulse coincides with the start of the laser scan and is used to latch to the accelerometer value at that instant. In addition, the laser data is tagged with an index called the sync index that keeps the count of the number of sync pulses that have been transmitted since the start of data collection. Synchronisation between the laser and accelerometer is achieved by matching the number of sync pulses with the sync index from the received sensor data. Fig. 3.4 [6] illustrates the use of sync pulses for synchronisation. There are two basic modes of operation for the RoLine 11xx family.

1. The Free Mode, which outputs the raw data, contains the distance value for each of the 198 points in a single scan.

2. The Bridge Mode, outputs a single value for each scan, which is the filtered average

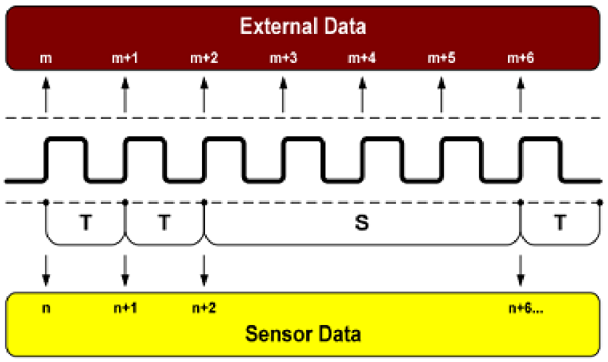

Figure 3.4. Synchronisation using sync pulses.

distance value of all the data points in the scan. Both these modes were evaluated for computing the longitudinal profile.

3.1.2 Accelerometer

The Columbia Research Labs SA-107BHP high performance, single axis servo accelerometers are used for the profiling system. It has a range of +/- 4 g and an analog output voltage of 1.876 V/g. These accelerometers are ideal as they are self-contained and do not require any signal conditioning. The accelerometer needs an input voltage of +/-15 V for operation. The output of the accelerometer is connected to the A/D converter through a 100 Hz low pass filter.

3.1.3 A/D Converter

The DT9816-A from Data Translation Incorporated is used as the A/D converter. It has 6 single-ended analog input channels with an input signal range of +/-10V. It has 16-bit resolution and the maximum sampling 150 kS/s per channel. It also has 16 digital I/O channels and 1 counter/timer. The DT9816-A connects to the computer via a USB port and can be configured for operation easily through software.

3.1.4 Distance Encoder

A distance encoder attached to the rear tire of the test vehicle is also connected to the instrument box for measuring the distance travelled. The output of the distance encoder is connected to the A/D converter.

3.1.5 Start Sensor

To detect the start and end of each test section on the road, an infrared start sensor is used. A reflective tape is pasted on the road at the start and end of each test section. The infrared sensor detects this tape as the vehicle passes over it and the output of the sensor changes from high (+5V) to low (0V). The output of the start sensor is also connected to the A/D converter.

3.2 Circuit Boards

Two printed circuit boards were developed for the RoLine laser profiling system. These boards are used to power the laser and the accelerometers as well as to condition the output signals from all the sensors before connecting them to the A/D converter.

3.2.1 Portable Profiler Signal Interface Board

The portable profiler signal interface board, which was used in previous inertial profiler systems, was modified to interface with the RoLine laser system. The board basically contains a +12V to +/-15V DC-DC converter to power the accelerometer. The +12V input power is taken from the car power adapter connected to the instrument box. The start sensor output is passed through a 74LS541 line driver and then connected to channel 1 of the A/D converter. Two 100 Hz analog filters from Frequency Devices were used to filter the accelerometer and laser analog outputs. Since the RoLine laser output is in digital format, the board was modified such that one 20

Hz or 100 Hz filter can be used for the accelerometer, keeping it backward compatible with the older profiling systems. The accelerometer and/or laser signals are passed through an op-amp buffer amplifier before connecting to the A/D converter. A 7805 voltage regulator IC was added to the circuit to power the chips on the board and a few capacitors were also added to eliminate noise and transients in the supply voltage. The circuit diagram and the PCB layout for the signal interface board are shown in Fig. 3.5 and Fig. 3.6 respectively.

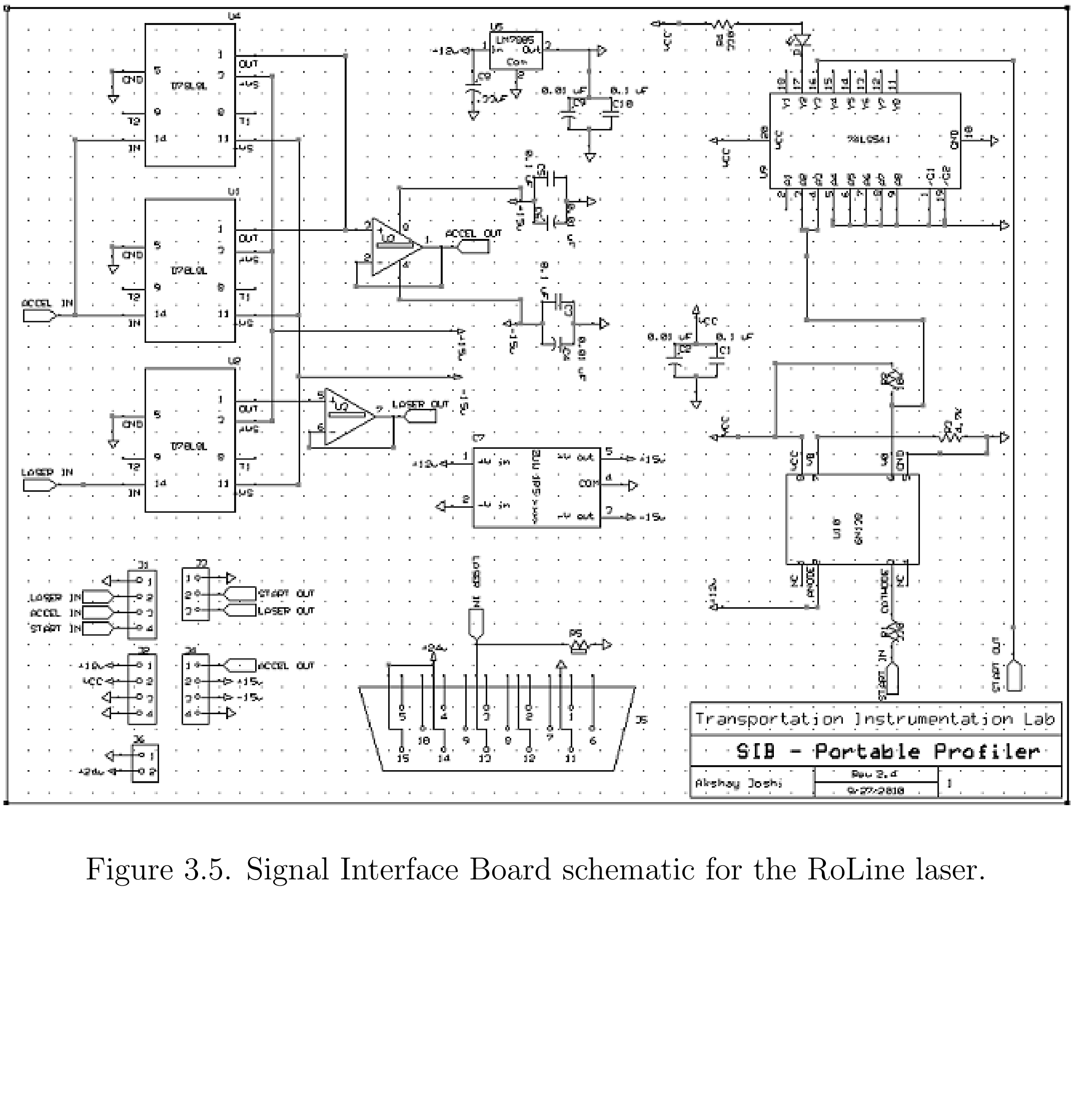

Figure 3.5. Signal Interface Board schematic for the RoLine laser.

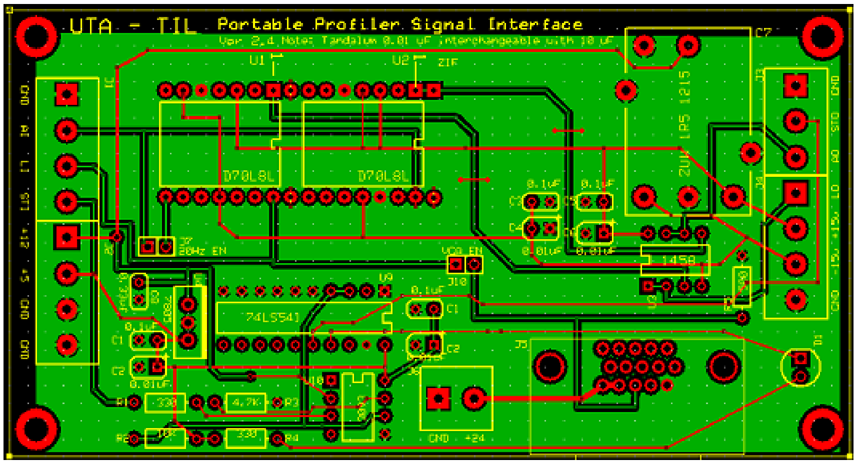

Figure 3.6. Signal Interface Board PCB layout for the RoLine laser.

3.2.2 RoLine Power Sync Board

A separate board was designed and developed for the RoLine laser system to generate the +48 VDC required for the operation of the laser. It also interfaces the sync signal that is generated by the RoLine laser for synchronisation with the accelerometer. The board contains a 12 V to 48 V DC-DC converter for generating the supply voltage for the RoLine laser. The RoLine laser generates an analog current signal for the sync pulse. This current signal is converted to a voltage signal using a 2 kΩ resistor. The voltage signal is then connected to a Schmitt trigger and the output of the Schmitt trigger is connected to the A/D converter. The board also contains a 5 V voltage regulator (7805) for powering the Schmitt trigger IC (74221) and some capacitors to reduce supply line noise. The circuit diagram and the PCB layout for the RoLine power sync board are shown in Fig. 3.7 and Fig. 3.8 respectively.

3.3 Software Description

A program was written for Windows Operating System to collect the data from various sensors of the RoLine profiler system described above. The program was

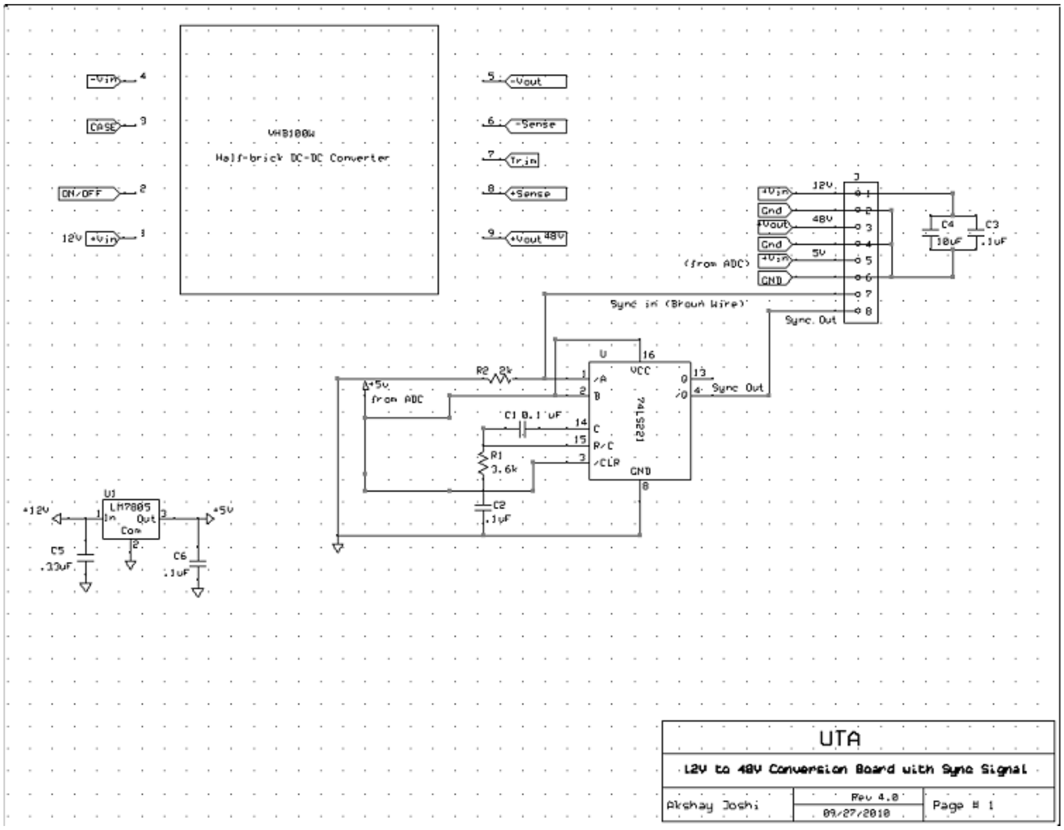

Figure 3.7. Power Sync Board schematic for RoLine laser.

written in C programming language and supported the Free mode as well as the Bridge mode of operation of the RoLine laser.

3.3.1 RoLine Data Collection Program

For configuring the RoLine laser and setting it up for data collection, the laser has to be connected to the computer via an Ethernet port. Each RoLine laser has a unique IP address, through which a connection can be established. The laser manufacturers supply basic functions that can be used to communicate with the laser. These functions were used to connect to the laser and configure its mode of operation. Callback functions were written for receiving the laser data through the Ethernet. The laser data is sent as a collection of multiple TCP/IP packets. The

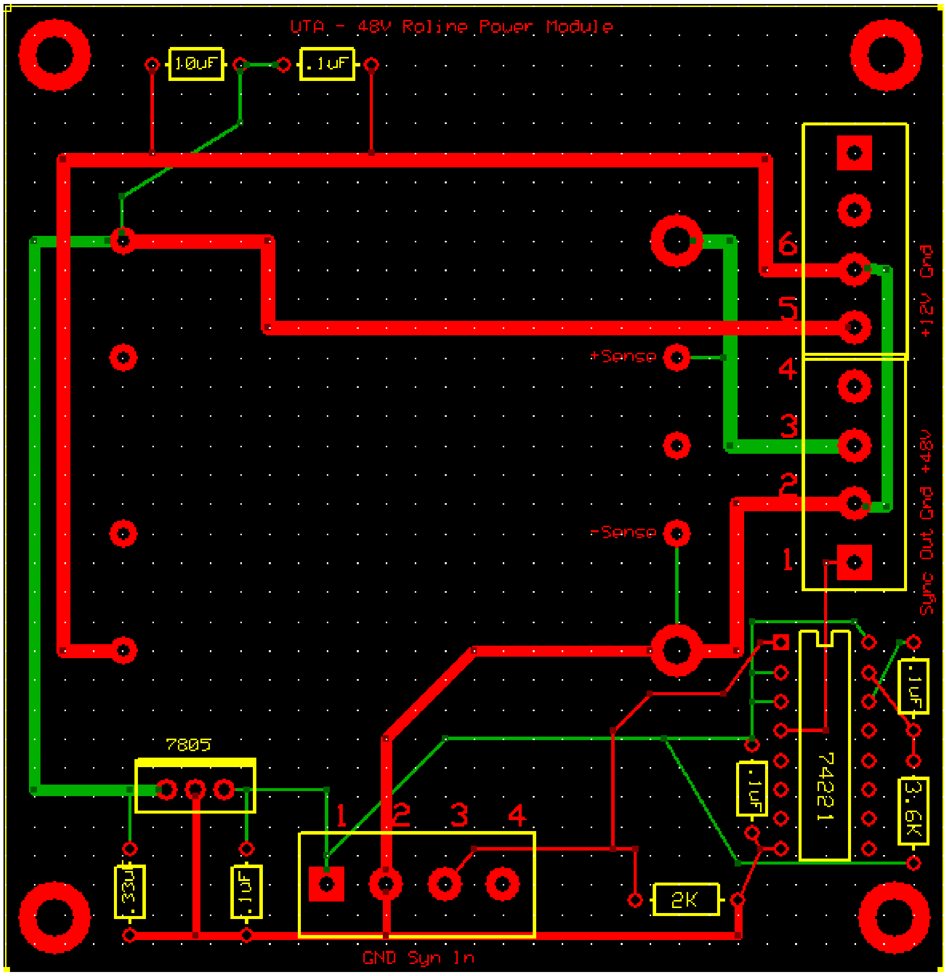

Figure 3.8. Power Sync Board PCB layout for RoLine laser.

actual data is extracted from these packets and written to a CSV(comma separated values) file, which acts as an input to the profiling algorithm program. Separate functions are written for extracting the data from the Bridge mode and the Free mode.

3.3.1.1 Bridge Mode

The Bridge mode sends a single value per scan from the laser. This reduces the high-resolution, high-density full profile data to an averaged value characterising

the tire-road contact in that scan. The format of the Bridge mode data is shown in Fig. 3.9 [6]. The header information is extracted from each packet and bridge values along with their attributes are stored in the file. The bridge values contain the distance to the target while the attributes field contains the sync index and tracking mode information. Each packet is configured to contain 100 bridged values corresponding to 100 scans of the laser.

Bridge Message

Field	Type	Description
messageSize	64s	Total size of message (bytes)
messageId	64s	Type of message (2)
reserved[2]	64s	Reserved for internal use
deviceId	64s	Sensor serial number
count	64s	Count of bride values grouped in message
reserved[7]	64s	Reserved for internal use
attributes[count][3]	64s	Attributes (defined below)
bridgeValue[count]	16s	Bridged value arrays (in 0.01mm)

Bridge Message Attribute

Field	Type	Description
timestamp	64s	Capture time (in microseconds)
syncIndex	64s	Counter of the number of 3kHz clock periods.
trackingMode	64s	Indicates whether the range data is obtained from a tracking window (0) or a search window (1).

Figure 3.9. Bridge mode data message format.

3.3.1.2 Free Mode

The default mode for the RoLine laser is the Free mode. In free mode, the data for each point in the scan is sent from the laser. The format of the Free mode data is shown in Fig. 3.10 [6]. Each packet is configured to contain 100 scans of the laser. Each scan of the laser is configured to contain 80 points. These parameters can be

changed by writing a new settings file to the laser. The distance value for each point in the scan is stored along with its attribute information.

Free Profile Message

Field	Type	Description
messageSize	64s	Total size of message (bytes)
messageId	64s	Type of message (1)
reserved[2]	64s	Reserved for internal use
deviceId	64s	Sensor serial number
endianness	64s	Endianness for the profile data*. Little-endian = 0, big-endian = 1
reserved[4]	64s	Reserved for internal use
count	64s	Count of profile arrays grouped in message
width	64s	Count of range points per profile array
channel		If channel=2, then the profile arrays contain both z- and x-values. If channel=1, then the profile arrays contain only the z-values
reserve[1]	64s	Reserved for internal use
attributes[count][3]	64s	Profile attributes (defined below)
points[count][width][channel]	16s	Profile arrays consisting of (z,x) or only (z), depending on 'channel' (in 0.01mm). Can be little-endian or big-endian

Free Profile Attribute (Full Profile)

Field	Type	Description
timestamp	64s	Capture time (in microseconds)
syncIndex	64s	Counter of the number of 3kHz clock periods
trackingMode	64s	Indicates whether the range data is obtained from a tracking window (0) or a search window (1).

Figure 3.10. Free mode data message format.

For collecting the data from the A/D converter simultaneously with the laser, the A/D converter is configured as soon as a connection with the laser is established and a start command is received from the user. The driver software that is provided along with the DT9816-A provides many APIs for configuring the A/D converter. When

the start command is issued, a new thread is created to configure the ADC. The APIs are used to set up the ADC with 5 analog input channels with the sampling frequency of 15 kHz for each channel. The buffer size and the number of buffers is set up for the ADC, and a callback function is registered for receiving the data from the ADC when the buffers are full. Once the configuration of the ADC is completed, the daughter thread sets a signal and waits for a semaphore from the parent thread. Once the parent thread receives the signal from the daughter thread, it issues a start command to the laser and signals to the daughter thread. On receiving the signal from the parent thread, the ADC starts its operation. The callback function for the ADC is called whenever the buffer is full. The data from the buffer contains the digital values of all the 5 channels and is written to a text file. The callback function for the laser writes the laser data to a CSV (comma separated value) file. If the user enters the stop command, a stop command is conveyed to the ADC as well as the laser. After flushing the buffers to the file, the daughter thread is terminated. The flowchart in Fig. 3.11 illustrates the flow of the data collection program.

3.4 Dual Laser System

In addition to longitudinal profiles, TIL has also developed a texture profile measurement system. Until now, all the profiling systems have to be run individually for collecting the data. This involved mounting one profiling system to collect data for a test section, then un-mounting it and mounting the other profiling system for collecting data on the same section. To avoid this mounting/un-mounting and multiple runs over the same section, TxDOT wanted a system that could simultaneously collect data from multiple systems. To do this, a dual laser system was developed, which could collect data from the RoLine profiling system and the 19 mm profiling system simultaneously. A special mount was created by TTI (Texas Transportation Institute, Texas A&M) to hold the two lasers as well as the Texture laser. The two laser system setup, mounted on the test vehicle along with the texture laser can be seen in Fig. 3.12

The 19 mm profiling system uses an SLS5000 laser developed by LMI technologies. This laser has an analog output voltage, which is passed through a 100 Hz filter (on the Signal Interface Board refer to Fig. 3.5) and then connected to the A/D converter (DT9816-A). The SLS5000 laser is a single-spot laser and operates in the infrared region of the light spectrum. It operates at +24 VDC and its measurement range is 70 mm with a clearance distance of 200 mm.

Both, the RoLine profiling system and the 19 mm profiling system use DT9816-A A/D converters, which are connected to the same computer. The RoLine data collection program was then modified to identify both the ADCs connected to the computer during initialization. It is essential to associate each DT9816 to its corresponding laser system to avoid mix up of data. To identify the laser system for the ADCs, the digital input lines of the ADC were used. For the 19 mm laser system the digital input channel 0 was set to 0 V, while the digital input channel 0 for the

RoLine system was set to 5 V. In the program, when an ADC was detected, its digital input channel 0 was read and the laser system was identified according to its value. Each ADC was then setup for data collection based on the laser system to which it belonged. While both the systems used 5 analog input channels, the sampling rate of the RoLine laser system was set to 15 kHz while that of the 19 mm system was set to 3 kHz. The callback function for the ADC was also modified such that it would identify the ADC to which the buffer belonged. Two separate text files were created for the two laser systems, and the data was written to them accordingly. Using this technique, data can now be collected from these two laser systems simultaneously. Refer Fig. 3.13 for the detailed flow for configuring multiple A/D boards.

While testing these profiling systems on the field, it was noticed that the start sensor would trigger off incorrectly on some of the runs because of debris or paint on the track. This causes a problem since the profile generated from such runs would be based on an incorrect start of the test section. Such runs cannot be used for evaluating the condition of the track or certifying the profiling system. Also, sometimes the start sensor would not trigger at all, invalidating the entire run. However, such faulty runs cannot be detected until processing of the data is started. If sufficient number of valid runs are not available, the entire test has to be done again. To avoid this scenario, a feature is added in all the data collection programs. The start sensor channel of the A/D converter is continuously monitored. As soon as the start sensor triggers, a message is displayed on the screen, notifying the operator that the start tape is detected.

The start sensor and the RoLine laser work independently and are synchronised using the sync signal and the sync index3.4. To start the data collection for the RoLine laser system, the start commands are issued to the laser and the A/D board simultaneously. However, the laser takes approximately 1.2 seconds to actually start

emitting a laser beam and a corresponding sync signal. If data is collected at 30 mph, almost 50 feet are covered in 1.2 seconds. If the data collection program is started less than 50 feet before the start of the test section (indicated by the start tape), the vehicle might pass over the start tape before the laser actually starts emitting the laser beam. In such cases, the start tape trigger point would be lost after synchronising the laser data with the accelerometer data, rendering the entire run invalid. Hence, for the RoLine laser system, the start tape has to be detected only after the laser has turned on. For this, the sync signal channel in the ADC is monitored. Once the sync signal is detected, the start sensor channel is monitored. The operator is notified by displaying a message on screen once the start sensor is triggered. The operator can then abort the run if the start tape was incorrectly detected or not detected at all and start a new run. Thus, it is ensured that all the data collection runs are valid and can be used for generating the profile.

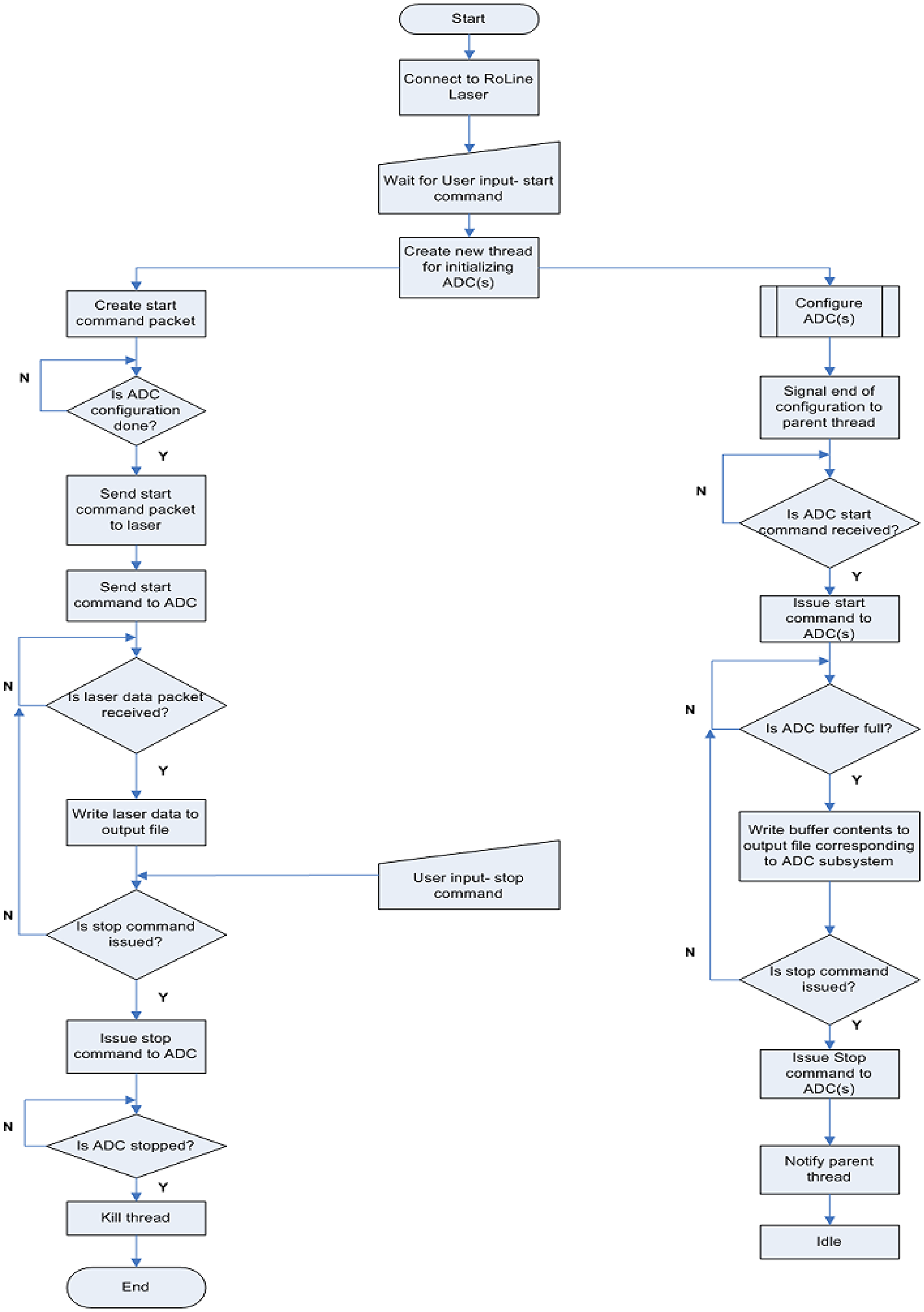

Figure 3.11. Flowchart for Data Collection Programs.

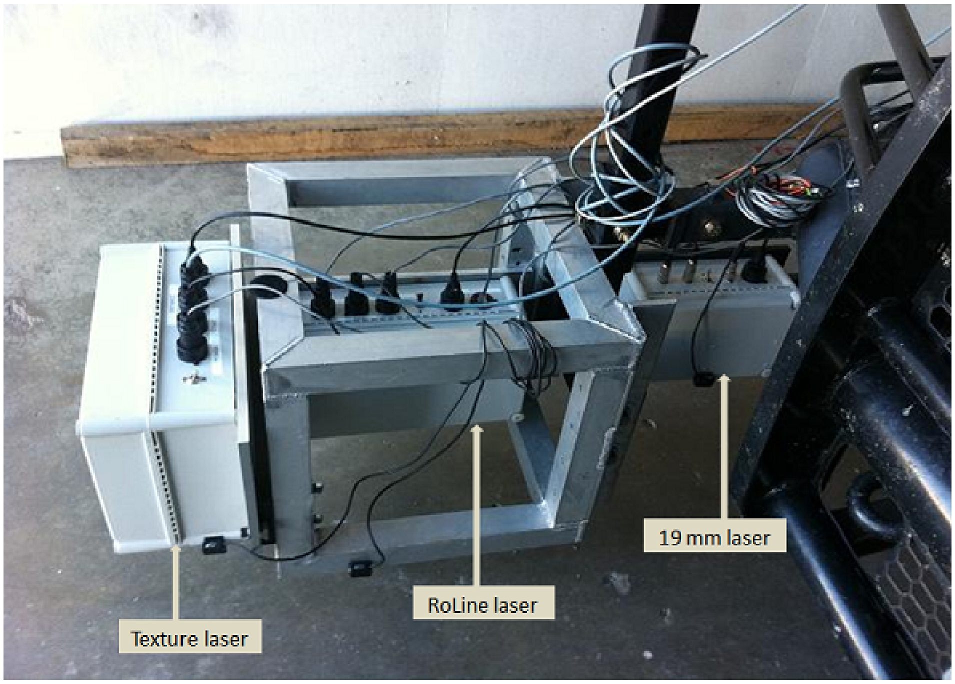

Figure 3.12. Setup for the Dual laser system.

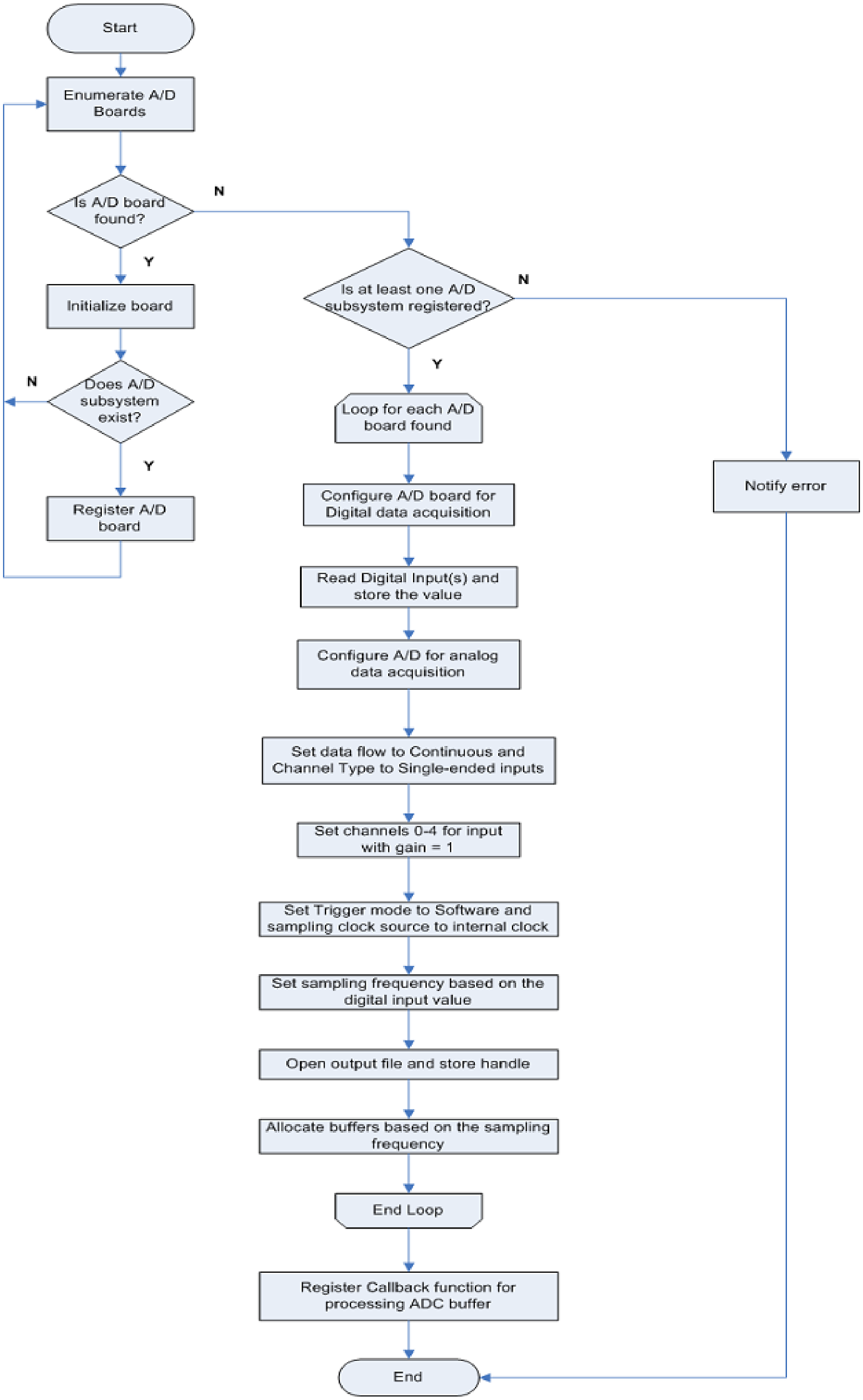

Figure 3.13. Flowchart for configuring ADC(s).

CHAPTER 4

DATA PROCESSING

Once the data for the RoLine profiling system is collected, a profile has to be generated using the data. The program used for processing the existing profiling system had to be modified since the RoLine laser sends its output in digital format. As a result, two separate files are created by the RoLine data collection program. The data processing program now has to read the ADC data from a text file while the laser data has to be read from the CSV file. The ADC data and the laser data has to be synchronized for the proper operation of the profiling algorithm. Moreover, the laser data could be in Bridge as well as Free mode and that has to be accommodated in the program.

4.1 Bridging Algorithm

If the Bridge mode is set in the laser, then the laser output contains only the bridged values, which can be used directly for generating the longitudinal profile. However, if Free mode is selected, then the laser output file contains the entire raw data and bridged value for each scan has to be calculated before it is for computing the profile. This bridged value should be the averaged value of all the points in the scan such that it represents the entire tire-road contact profile. To compute this bridged value, three different approaches for the Tire-Bridging algorithm were implemented and evaluated.

To enable a fair representation of the tire-road contact point, the bridging algorithms involve the following steps:

1. Data qualification - to qualify a scan for use, it should not contain more than a user-defined number of invalid points. Invalid points are represented by a value of -32767 and occur when the laser line is not captured by the camera sensor. These invalid points are discarded before computing the bridged value.

2. Tilt Compensation (Optional) - Vehicle movement(roll) and rutting may modify the perceived contact point and may be accomodated. If compensating for tilt, the center point of the scan is used for compensating the tilt. Fig. 4.1 [6] illustrates this step.

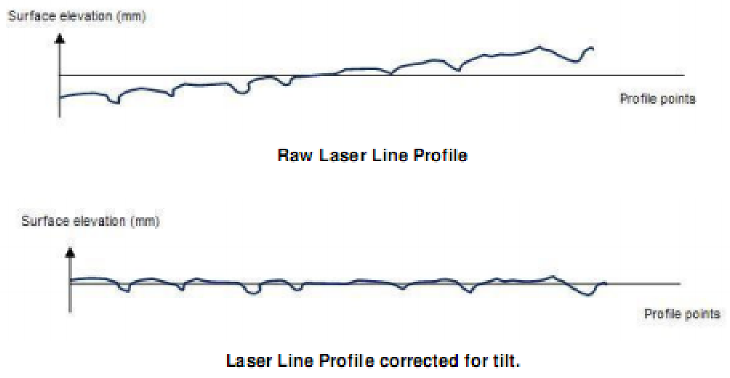

Figure 4.1. Tilt compensation for Tire-Bridging Algorithm.

3. The points are then sorted according to their elevation for filtering. The highest and lowest values can then be removed depending on user defined parameters called ”window skip” and ”window size”. This is basically done to remove the outliers. Fig. 4.2 [6] shows the parameters for removing the outliers.

4. Finally, the average of the remaining points is taken and the resulting value is the bridged value for that scan.

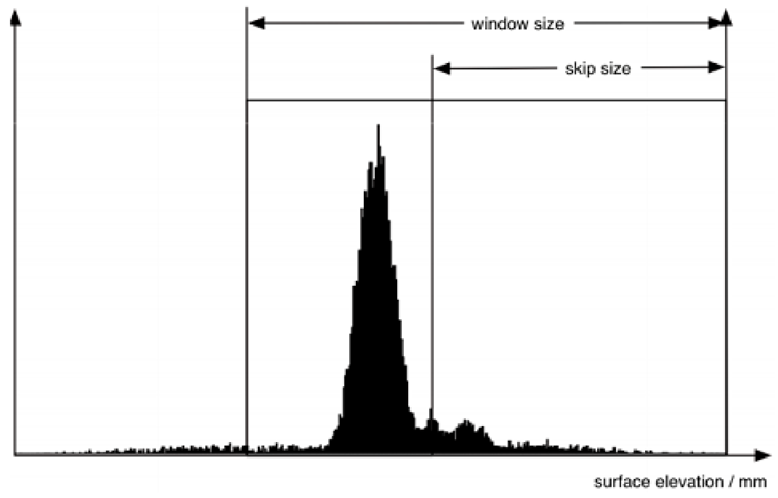

Figure 4.2. Outlier removal for Tire-Bridging Algorithm.

4.1.1 Averaging

In this approach, the average of all the qualified points in the scan is calculated, after skipping the user defined number of outliers. Tilt compensation is not done in this approach.

4.1.2 Least Squares line fitting

In this approach, the tilt is compensated after removing all the invalid points. For compensating the tilt, the trend in the data has to be found first. To find the trend, a line is fitted through all the valid data points using the least squares line fitting algorithm. In this line fitting technique, the best-fit line is found by minimizing the sum of squares of the offsets of the points from the line. Practically, the vertical offsets from a line are minimized instead of perpendicular offsets (refer Fig. 4.3) since it provides a much simpler analytic form for fitting the parameters.

For a set of n data points, the sum of the squares of the vertical deviations R^2 is first found.

$$R^2 = \sum [y_i - f(x_i, a_1, a_2 \ldots, a_n)]^2 \tag{4.1}$$

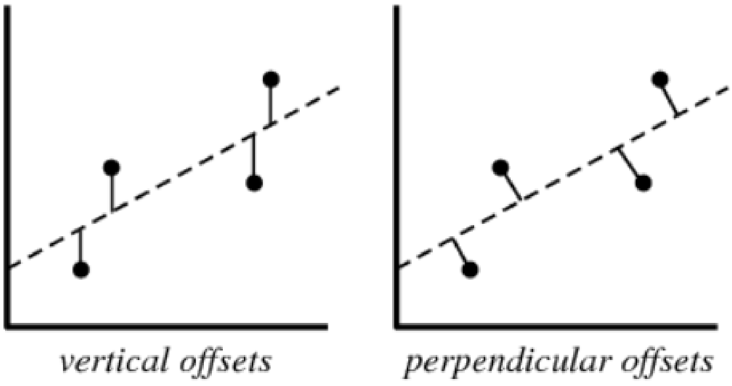

Figure 4.3. Offset types for linear least squares fit.

For R_2 to be minimum,

$$\frac{\partial R^2}{\partial a_i} = 0 \tag{4.2}$$

Define the sum of squares as ([7]):

$$S_{xx} = \sum_{i=1}^{n} (x_i - \overline{x})^2 \tag{4.3}$$

$$S_{yy} = \sum_{i=1}^{n} (y_i - \overline{y})^2 \tag{4.4}$$

$$S_{xy} = \sum_{i=1}^{n} (x_i - \overline{x})(y_i - \overline{y}) \tag{4.5}$$

where

$\overline{y} = \frac{\sum_{i=1}^{n} y_i}{n}$

$\overline{x} = \frac{\sum_{i=1}^{n} x_i}{n}$

Then for a linear fit ($f(a, b) = a + bx$), the values of a and b can be obtained from the following two equations,

$$b = \frac{S_{xy}}{S_{xx}} \tag{4.6}$$

$$a = \overline{y} - b\overline{x} \tag{4.7}$$

The above equations were implemented in MATLAB to get the approximation of the trend line in each profile scan. Once an approximation for the trend line is computed, the center point of that line is found and all the data points are rotated about the center point to compensate the tilt. Once the data is compensated for tilt, it is sorted and the outliers are removed. The average of the remaining values is then reported as the bridged value.

4.1.3 RANSAC

This approach is similar to the Least Squares Regression line, except that it uses RANSAC (RANdom Sampling And Consensus) for finding the trend line in the data. RANSAC is an iterative method for estimating the parameters of a mathematical model. Given a set of 2-D points, RANSAC finds the line that minimizes the sum of squares of the offsets for a subset of those points, such that none of the selected points deviate more than a threshold t. The value of the threshold t can be set according to the measurement noise.

The basic algorithm of RANSAC is as follows,([8])

1. Two points are randomly sampled from the data set and a line is fitted through them.

2. Consensus is taken for that line by computing the number of points that lie within a threshold distance t, from that line. These points are called the inliers.

3. If the number of inliers is greater than a threshold T, then a line is estimated for all the inliers using least squares fit and the algorithm is terminated.

4. If the number of inliers is less that T, the random sampling is repeated at least N times, and the line with the highest consensus is selected. The inliers for this line are computed and a line is estimated for all the inliers, which is the best fit for the given data set.

The major advantage of RANSAC is that it is a robust line fitting algorithm, which estimates the parameters of the line with high accuracy even if a high number of outliers are present in the data. The RANSAC algorithm was implemented in MATLAB to find the trend in each profile scan. Once an approximation for the trend line is computed, the center point of that line is found and all the data points are rotated about the center point to compensate the tilt. Once the data is compensated for tilt, it is sorted and the outliers are removed. The average of the remaining values is then reported as the bridged value.

The bridged values, calculated using either of the three methods, are then used along with the ADC values to compute the longitudinal profile of the measured road section.

4.2 Synchronising Data

To synchronise the laser data with the ADC data, the 3000 Hz sync signal generated by the RoLine laser was first used as an external clock for the ADC. The DT9816-A was configured to use the external clock for sampling the analog input channels. However, when the data was collected in this configuration, it was noticed that the ADC data always lead the RoLine laser data by a variable number of sync pulses. To circumvent this problem, the sync signal was connected to one of the analog input channels and then sampled at 15 kHz using the internal clock.

Thus, the ADC output file contained the data sampled at 15 kHz. However, the data corresponding to the falling edge of the sync signal was required. Therefore, a preprocessing stage was added for the ADC data, which would read the sync signal data and look for the falling edge. Data from all the channels at that instant was then noted into a temporary file. This temporary file was used to synchronise the ADC data with the laser data based on the sync index for each laser reading. Sometimes,

the laser would not output any data if it lost track of the laser line. In such cases, the sync index jumped by a few counts and the corresponding ADC data was also skipped to keep the laser data and the ADC data in synchrony.

CHAPTER 5

EXPERIMENTS AND RESULTS

5.1 RoLine Bridge Mode

The first part of this thesis how to use a RoLine profiling system in the Bridge Mode. Once the hardware and the software for the RoLine laser was developed, it was initially tested in the lab. After verifying that the laser data was accurately recorded using the data collection program in Bridge mode, the system was tested on the certification test track located at TTI(Texas Transportation Institute) in College Station, TX. The profile of the test track is known and is used as a reference to evaluate the profile generated by the RoLine profiling system. Data was collected for multiple runs and the system was evaluated based on the accuracy and repeatability of the profile generated. The profiles generated by the RoLine profiling system in Bridge mode are shown in Fig. 5.1. The results of the certification tests are summarized in Table 5.1.

For measuring the repeatability of the profile, the average standard deviation of the profile was calculated and found to be 12 mils (not to exceed 35 mils). The standard deviation of the IRI was 0.70 in/mile (not to exceed 3.0 in/mile).

When compared to the reference profile for the accuracy of the profile, the average absolute difference between the profiles was 16 mils (not to exceed 60 mils). The difference in IRIs between the reference profile and the RoLine profile was 4.35 in/mile (not to exceed 12.0 in/mile).

Thus, the RoLine profiling system met all criteria for repeatability and accuracy and passed certification in the Bridge mode.

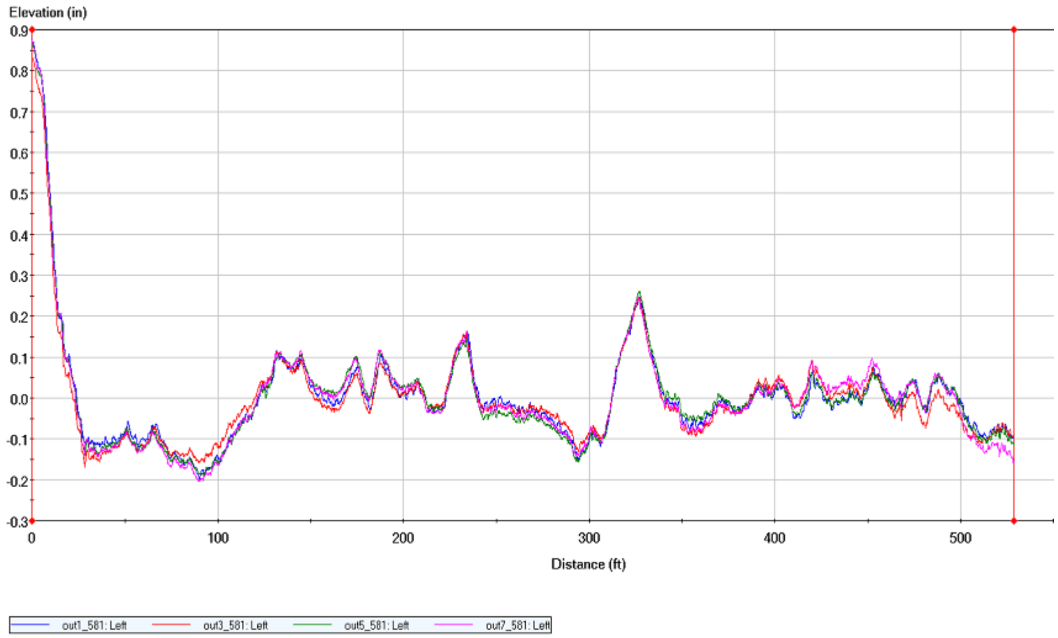

Figure 5.1. RoLine profiling system Bridge mode results (TTI test track).

5.2 RoLine Laser Tire-Bridging Algorithm

5.2.1 Lab Experiment

One of the major focuses of this thesis was to develop a RoLine profiling system using the Free mode of the RoLine laser. Free mode data is useful since it gives an accurate representation of the tire-road contact profile. It can be used to calculate the texture of the road. Moreover, Free mode data can be used to compute the entire 3-D profile of a road, if multiple lasers are used. However, to compute the IRI and the longitudinal profile from the Free mode data, it is essential to implement a Tire-Bridging Algorithm. As discussed in Section 4.1, three different techniques for computing a representative bridged value from the free mode raw data were implemented. Initially, the three techniques were evaluated in the lab by statically measuring the distance to a test sample. The results of three techniques on the data collected in free mode, were then compared to the data collected in bridge mode. The results of this experiment

Table 5.1. RoLine Bridge Mode Results

Run #	IRI (in/mile)
1	56.6
2	56.2
3	55.2
4	54.3
5	54.7
6	55.0
7	55.3
8	54.7
9	54.5
10	54.8
Avg	55.13
Std dev	0.70

are summarized in Fig. 5.2. As shown in the Fig. 5.2, for this experimental setup, all the three tire-bridging techniques produce values that are very close to the Bridge mode values as the average difference between the values is less than 0.20 millimeters.

5.2.2 Free Mode Tests on TTI track

For further evaluation of the tire-bridging algorithms, data was collected in the free mode on the TTI certification test track and analysed the performance of the three tire-bridging algorithms. The IRIs of the profiles generated by the three algorithms were then compared with each other. The profiles generated are shown in Fig. 5.3 The IRIs for the profiles are summarized in Table 5.2 As shown in Table 5.2 , the RANSAC and Least Squares fit techniques give a slight improvement over the averaging filter. For all the three methods, the accuracy and repeatability of the profiles passed certification.

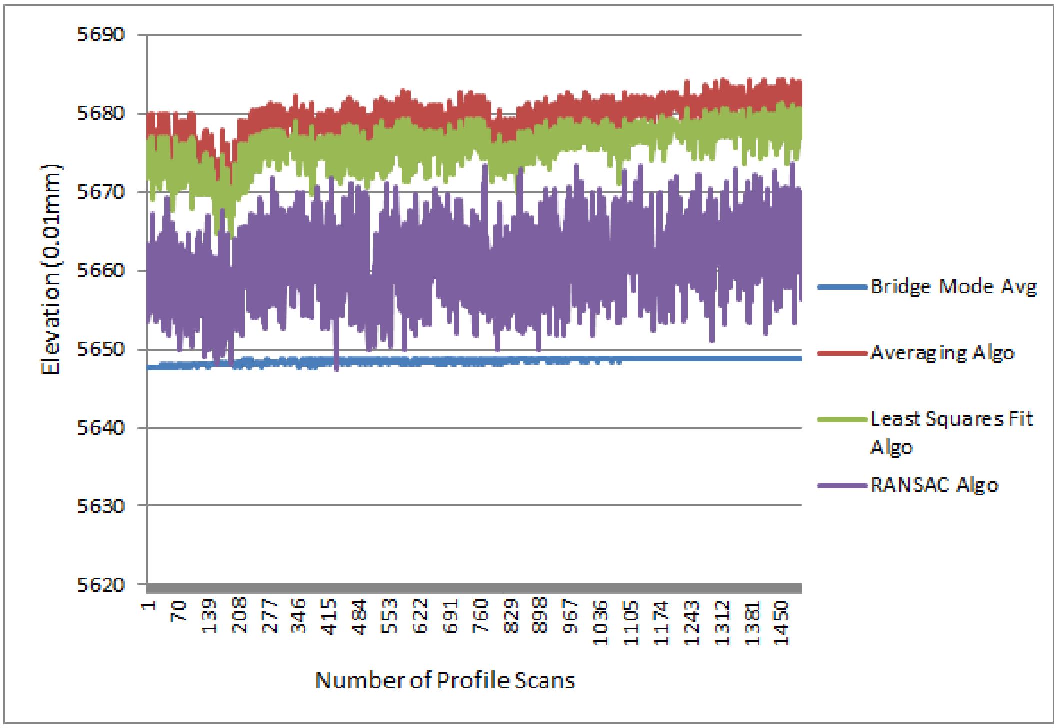

Figure 5.2. Results of Tire-Bridging algorithms (Lab).

5.2.3 Free Mode Tests on SH6

Once the RoLine laser system passed certification in the Free mode, it was used to collect data from a section of State Highway 6 near College Station, TX. All three tire-bridging techniques were then used on the data. The results of the tests are shown in Table 5.3

5.2.4 Dual Laser System Tests on TTI track

Once the RoLine profiling system in Free mode was certified on the TTI test track, the Dual Laser System described in Section 3.4 was tested. Data was successfully collected from both the RoLine laser system as well as the 19 mm laser system. The data for the RoLine system was collected in Free mode. The profiles generated by both the techniques are shown in Fig. 5.4. The profiling system statistics are

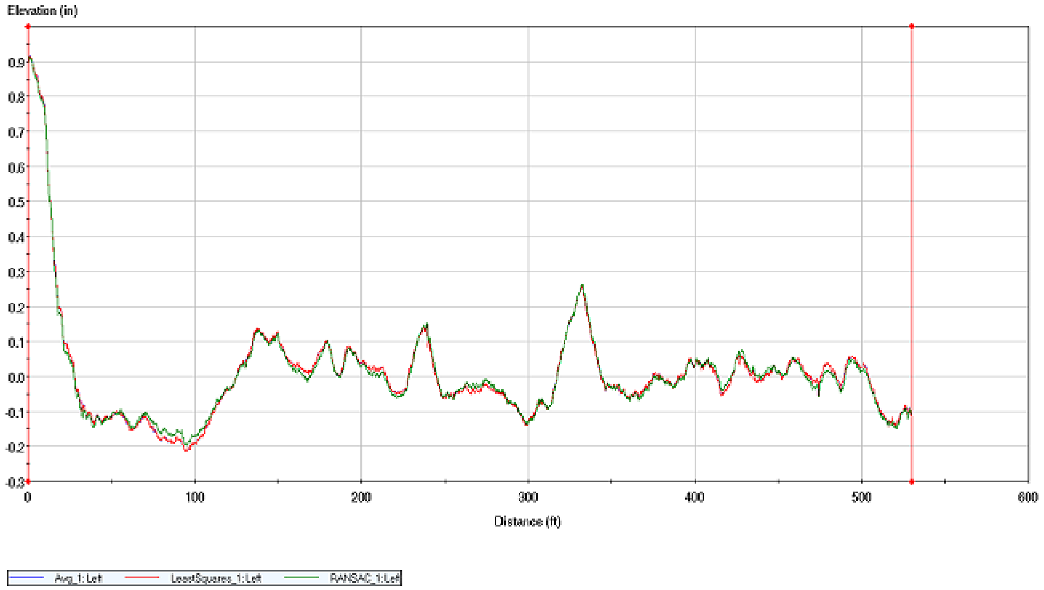

Figure 5.3. Results of Tire-Bridging algorithms (TTI test track).

summarized in Table 5.4. From Table 5.4 it can be seen that both the profiling systems give very good results when the data is collected using the dual laser system. Therefore, the dual laser system was certified.

Table 5.2. RoLine Free Mode Results for TTI test track

Run #	Averaging IRI	Least Squares Fit IRI	RANSAC IRI
1	57.3	57.2	57
2	57.6	57.5	57.3
3	58.2	58.1	57.9
4	56.7	56.6	56.3
5	58.2	58.1	57.9
6	56.8	56.7	56.5
7	55.6	55.5	55.2
8	60.3	60.2	60.1
9	60.8	60.7	60.6
10	56.8	56.7	56.6
11	56.4	56.3	56.1
12	55.6	55.6	55.3
Avg	57.52	57.43	57.23
Std dev	1.58	1.57	1.61

Table 5.3. RoLine Free Mode Results for SH6

Run #	Averaging IRI	Least Squares Fit IRI	RANSAC IRI
1	95.1	94.6	94.6
2	94.7	129.15	95.5
3	96.5	96.5	95.9
Avg	95.43	106.73	95.33
Std dev	0.77	15.83	0.54

Table 5.4. Summary of Profiling results of the Dual Laser System

Metric	19mm Laser	RoLine Laser
STDV of profiles (mils)	17	11
STDV of IRI(in/mile)	0.45	0.95
Accuracy of profile w.r.t Reference(in/mile)	0.02	0.18

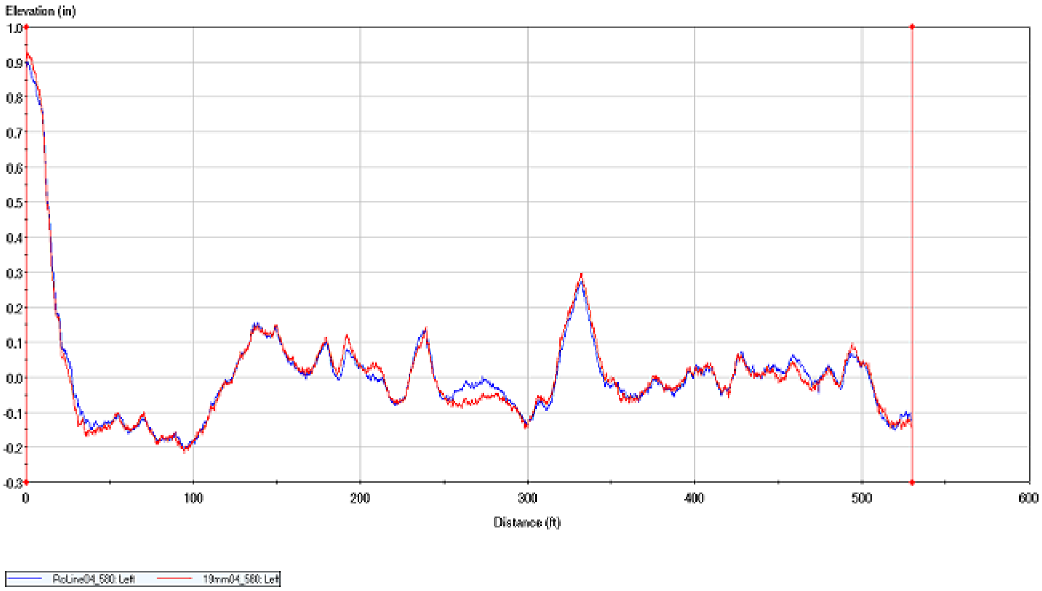

Figure 5.4. Dual Laser System results (TTI test track).

CHAPTER 6

CONCLUSIONS AND FUTURE WORK

In this chapter the results of the research performed during the course of this thesis are summarized.

6.1 Conclusions

This research mainly focused on developing a RoLine laser profiling system , using both, the Bridge mode and the Free mode. As shown in Section 5.1, data was successfully collected in the Bridge mode and processed to generate the profiles. The profiles generated by this method closely matched with the reference profile. The profiles generated for multiple runs were both accurate and repeatable and passed certification.

The Free mode data was also successfully collected and processed. Three different approaches to find the bridged value from the free mode raw data were implemented. As shown in Table 5.2, the least squares fit method and the RANSAC method are slightly better than the averaging method on the TTI test track. The reason the difference between the three methods is less is that the TTI test track is made up of asphalt, which has very little texture. The results for the RANSAC method are better on the Highway 6 data, which is a concrete pavement with conventional and variable tining (refer Table 5.3). This is because the data on highway 6 has more outliers due to tining, which is a way of imparting texture to the road by dragging a tined instrument across a fresh pavement.

As the line lasers get wider, the effect of vehicle roll due to deterioration of the road

/ slope of the road will be more pronounced on the free mode profile scans. In such cases, the least squares method and the RANSAC method will give more accurate results since they compensate for the tilt in the profile. The profiles of the TTI test track, generated using the Free mode data, were both accurate and repeatable and passed certification.

Thus, it is shown that the RoLine laser can be used in both the Free Mode as well as the Bridge mode, to generate longitudinal profiles. The profiles generated by this laser are very accurate and repeatable and give the true Tire-Road contact information.

Also, a dual laser system was successfully implemented, that collects data from the 19 mm laser and the RoLine laser simultaneously. Table 5.4 shows that the data collected from such a system is very accurate and repeatable and passes certification. This system is extremely useful for highway test engineers, and it saves them a lot of time and effort. Finally, this system serves as a platform for the 3-D bridge monitoring system, which requires accurate road profile information to collect precise videos of the bridge structures.

6.2 Future Work

Work is going on to collect data from three lasers simultaneously, which include the RoLine laser, the 19 mm laser and the texture laser, using a single data collection program. A system can be developed to collect data from multiple RoLine lasers such that the entire 3-D profile of the road can be generated in a single continuous run. A real-time program can be developed that processes the data collected from various lasers immediately, producing the profiles in real-time. An embedded board or a Single Board Computer (SBC), mounted inside the instrument box, can be used to collect and process the data.

REFERENCES

[1] M. W. Sayers and S. M. Karamihas, *The Little Book of Profiling.* University of Michigan, Ann Arbor, Transportation Research Institute, 1998.

[2] R. Walker and E. Fernando, “A portable profiler for pavement profile measurements - interim report.” Texas Transportation Institute, College Station, TX” Technical Report 0-6004-1, 2009.

[3] ASTM, “Standard practice for computing international roughness index of roads from longitudinal profile measurements,” in *Annual Book of ASTM Standards.* American Society for Testing and Materials, 1999, vol. 04.03, ch. E1926-98.

[4] T. D. Gillespie, M. W. SAYERS, and L. SEGEL, “Calibration of response-type road roughness measuring systems,” NCHRP, p. 81, 1980.

[5] ASTM, “Standard practice for calculating pavement macrotexture mean profile depth,” in *Annual Book of ASTM Standards.* American Society for Testing and Materials, 1999, vol. 04.03, ch. E1845-01.

[6] *RoLine 11x0 User’s Manual*, LMI Technologies, Inc, 2010.

[7] E. W. Weisstein, “Least squares fitting,” From MathWorld–A Wolfram Web Resource. http://mathworld.wolfram.com/LeastSquaresFitting.html.

[8] M. A. Fischler and R. C. Bolles, “Random sample consensus: a paradigm for model fitting with applications to image analysis and automated cartography,” *Commun. ACM*, vol. 24, pp. 381–395, June 1981. [Online]. Available: http://doi.acm.org/10.1145/358669.358692

BIOGRAPHICAL STATEMENT

Akshay Joshi was born in Pune, India in 1984. He completed his Bachelors in Electronics and Telecommunication engineering from the University of Pune in 2005. He has four years of work experience as an embedded software engineer. Akshay began his graduate studies in 2009 at the University of Texas, Arlington. He joined the Transportation Instrumentation Lab in the CSE department as a graduate research assistant, where he works on developing profiling instruments for TxDOT. His areas of interest include embedded systems design, instrumentation and control.